Assembly Guide - Pent Shed 7x5

ESTIMATED ASSEMBLY TIME: 2 People 2 - 4 hours.
RECOMMEND: Pilot drilling screw holes first.

1. Lay the floor panel (A) in its desired position (remember to leave enough space around the building for roof overhang and maintenance). It is essential the floor is on a solid level base otherwise the building will not fit together properly and the door may not fit flush. Place the panels around the floor - it will help you understand how they fit together.

2. Position the back panel (C) on the back edge of the floor (the lip on the bottom overhangs the floor). While your assistant holds the back panel in place, place an end panel (D/E) on the floor to form a corner. Check that the panels are sitting flat on the floor and are butted together, fix together from the inside screwing through the end into the back using two of the screws provided (hexagon head coach screws on some models).

3. Select the other end panel (D/E) and place on the floor, screw to the back as before with two screws, again making sure the sections are flat on the floor.

4. Before fitting the front panel (B) remove the key from the inside of the door (where supplied) and unlock the door, screw the front to the ends from the inside as before.

5. Place the roof section (F) on the building. The shed may need pushing into square at this stage to allow the roof panel to drop into place. Before fixing check that the roof is sitting flat with the sides, if not it is possible the floor is not level and will need packing in one corner.

6. With the roof square check that all the walls are sitting flat on the floor. Screw the panels to the floor using two screws per panel, ensuring that you screw into a floor joist (follow the lines of nails in the floor to locate the joists).

7. Check that the roof overhang is equal to the front and back (or as required) secure the roof by nailing through the top of the roof into the framing on the sides and ends, you can also screw through the central roof framing into the framing on the ends.

8. Felt the roof using the small clout nails provided. Start by carefully removing the paper from the wide roll of felt, roll the felt (G) out on a flat surface and cut in half to give two equal strips. Place the first strip on the roof at the low side so that it overhangs both ends and approximately 50mm at the back. Secure with three evenly spaced nails along the upper edge and nail every 100-150mm along the edge of the roof framing working from the center out. Place the second strip so that it overlaps the first piece by 100-150mm and nail as before. On smaller models this piece will also cover the front of the roof and should be nailed along the roof framing first and pulled tight towards the back of the sheds and nailed every 100-150mm. If supplied place the narrow piece of ridge felt over the front of the shed and nail flush with the framing every 100–150mm from the center, pull tight to the back and nail every 100–150mm as before. Fold the ends of the felt and nail into the end of the farming.

9. Open the trim pack and remove the bargeboards, nail them to the ends of the roof, trim the felt if necessary.

10. Fix the corner strips (I) (long narrow strips) to each outside corner using three nails per strip (nail at an angle into the framing).

11. Apply the glass panes (J) to the shed from the outside using the beading provided (either in the trim pack or pre fitted in the window). Do not push the beading too tight against the glass or it will crack. **We advise you wear gloves when handling glass.**

AFTER CARE:
We recommend you treat your building within 6 months and from then on annually with a recognised brand of spirit based preservative. A range of treatments and colours can be purchased from your local Lawsons branch.

These instructions are meant as a guide only we reserve the right to alter design without prior notice.

	PARTS	
A	Floor section	1
B	Front panel	1
C	Back panel	1
D	Left hand end	1
E	Right hand end	1
F	Roof section	1
G	Felt rolls	2
H	Fascia boards	4
I	Corner strips	4
J	Glass panes**	
K	Nail/Screw pack	1

** qty depends on model

RECOMMENDED TOOLS:	
• Hammer (pin & claw)	• Cutting knife
• Saw	• 10mm Spanner/ Socket
• Drill	• Stepladders (for felting roof)
• Spirit level (for base)	• Cross head screwdriver (battery operated if available)

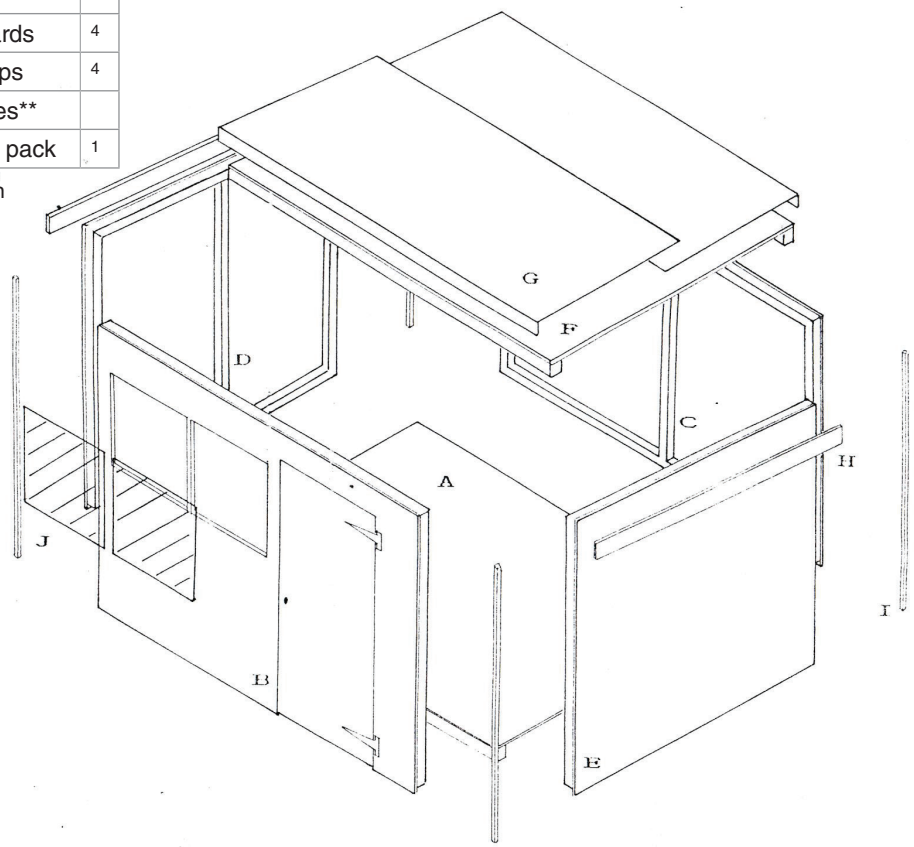

Floor plans are also available on our website